GMB HR84

Housing Relay - 8 Opto In, 4 Outputs

GMM AM08

grifo® Mini Module ATmega8L

TECHNICAL MANUAL

grifo®
ITALIAN TECHNOLOGY

Via dell' Artigiano, 8/6
40016 San Giorgio di Piano
(Bologna) ITALY
E-mail: grifo@grifo.it

http://www.grifo.it http://www.grifo.com
Tel. +39 051 892.052 (a. r.) FAX: +39 051 893.661

GMB HR84 & GMM AM08 Rel. 5.00 *Edition 14 December 2004*

GMB HR84

Housing Relay - 8 Opto In, 4 Outputs

GMM AM08

grifo® Mini Module ATmega8L

TECHNICAL MANUAL

Modular plastic Container **DIN 50022 Modulbox**, model **M4 HC53**; size: front **90** x **71** mm, height **58** mm; mounting on **Omega** rail DIN 46277-1 and DIN 46277-3; **GMM AM08** already installed on the **28** pin socket; **8** Optocoupled Inputs that can be both **NPN** or **PNP**; status of **8** inputs shown by **8 LEDs**; two inputs can pefrom **Interrupt** functions; twoe inputs can perform Counter functions; **4** Relay Outputs **5 A**; status of **4** outputs shown by **4 LEDs**; Serial Line in RS 232, RS 422, RS 485, current loop or **TTL**; 1 analog signal for **A/D** conversion with selectable full range; all signals can be connected through connectors featuring **Normalized** pin out; **4 I/O TTL** signals; **I²C BUS** availabe on connector for external devices; **Switching** power supply on board; protection of on board logic, through **TransZorb**; power supply in **DC** or in **AC**: 10 ÷ 40 Vdc or 8÷24 Vac for logic supply; possibility to manage internal FLASH and EEPROM in **In System Programming** mode; free software for **PC**, downloadable from ATMEL web site, to support **ISP** programming upload the generated code into on-board FLASH memory; wide range of development software available: **C** Compilers (ICC AVR); **BASIC** Compilers (BASCOM AVR); etc.; several demo programs and use examples provided as source code completely commented available for every development structure

grifo®
ITALIAN TECHNOLOGY
Via dell' Artigiano, 8/6
40016 San Giorgio di Piano
(Bologna) ITALY
E-mail: grifo@grifo.it
http://www.grifo.it http://www.grifo.com
Tel. +39 051 892.052 (a. r.) FAX: +39 051 893.661

GMB HR84 & GMM AM08 Rel. 5.00 *Edition 14 December 2004*

IMPORTANT

Although all the information contained herein have been carefully verified, grifo® assumes no responsability for errors that might appear in this document, or for damage to things or persons resulting from technical errors, omission and improper use of this manual and of the related software and hardware.

grifo® reserves the right to change the contents and form of this document, as well as the features and specification of its products at any time, without prior notice, to obtain always the best product.

For specific informations on the components mounted on the card, please refer to the Data Book of the builder or second sources.

SYMBOLS DESCRIPTION

In the manual could appear the following symbols:

Attention: Generic danger

Attention: High voltage

Attention: ESD sensitive device

Trade Marks

abaco®, **GPC®**, grifo® : are trade marks of grifo®.

Other Product and Company names listed, are trade marks of their respective companies.

GENERAL INDEX

FIGURE INDEX

INTRODUCTION

The use of these devices has turned - IN EXCLUSIVE WAY - to specialized personnel.
This device is not a **safe component** as defined in directive **98-37/CE**.

Pins of Mini Module are not provided with any kind of ESD protection. They are connected directly to their respective pins of microcontroller. Mini Module is affected by electrostatic discharges. Personnel who handles Mini Modules is invited to take all necessary precautions to avoid possible damages caused by electrostatic discharges.

The purpose of this handbook is to give the necessary information to the cognizant and sure use of the products. They are the result of a continual and systematic elaboration of data and technical tests saved and validated from the manufacturer, related to the inside modes of certainty and quality of the information.

The reported data are destined- IN EXCLUSIVE WAY- to specialized users, that can interact with the devices in safety conditions for the persons, for the machine and for the enviroment, impersonating an elementary diagnostic of breakdowns and of malfunction conditions by performing simple functional verify operations , in the height respect of the actual safety and health norms.

The informations for the installation, the assemblage, the dismantlement, the handling, the adjustment, the reparation and the contingent accessories, devices etc. installation are destined - and then executable - always and in exclusive way from specialized warned and educated personnel, or directly from the TECHNICAL AUTHORIZED ASSISTANCE, in the height respect of the manufacturer recommendations and the actual safety and health norms.

The devices can't be used outside a box. The user must always insert the cards in a container that rispect the actual safety normative. The protection of this container is not threshold to the only atmospheric agents, but specially to mechanic, electric, magnetic, etc. ones.

To be on good terms with the products, is necessary guarantee legibility and conservation of the manual, also for future references. In case of deterioration or more easily for technical updates, consult the AUTHORIZED TECHNICAL ASSISTANCE directly.

To prevent problems during card utilization, it is a good practice to read carefully all the informations of this manual. After this reading, the user can use the general index and the alphabetical index, respectly at the begining and at the end of the manual, to find information in a faster and more easy way.

CARD VERSION

The present handbook is reported to the **GMB HR84** card release **220503** and **GMM AM08** card release **110903**. The validity of the bring informations is subordinate to the number of the card release.

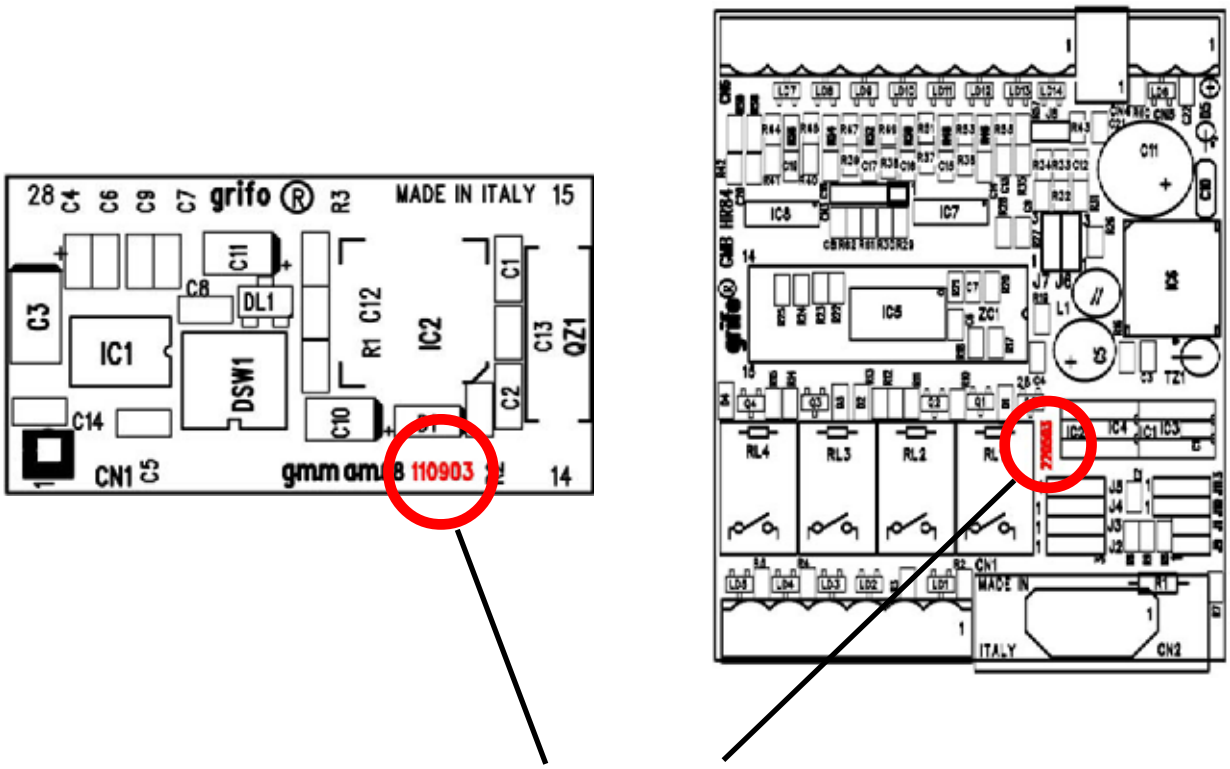

FIGURE 1: POSITION OF CARD RELEASE OF GMM AM08 AND GMB HR84

GENERAL INFORMATION

GMB HR84 & GMM AM08 is a module for DIN rail with a **grifo®** Mini Module CPU type **GMM AM08** already installed.
The board features 8 galvanically isolated inputs and 4 relays outputs with LEDs visualizations; an asynchronous serial line; an I^2C BUS serial line; an anlog input for A/D converter; a PWM output; up to 4 I/O TTL. Its rank is low cost controller, that can work as intelligent peripheral in autonomy and/or remoted inside a wider telecontrol/teleacquisition network.
The union **GMB HR84 & GMM AM08** is provided with a standard plastic container with clamps for common Omega rails that can be found in any electric panel.
Low cost of this interface and CPU Mini Modules allow to build with great profit a serie of low budget automation systems.
It is possible to create complete applications in astonishing short times and minumum costs by taking advantage of wide variety of software development tools, like **BASCOM AVR**, unexpensive and portable or C compilers **µC/51** and **HTC 51**, all available from **grifo®.**
The union is provided with a set of comfortable connectors that can be easily linked to the signals of the field without any additional module, so there is no additional cost.
Such connectors easy also update and assistance phases, that can be needed in time.
Overall features of union **GMB HR84 & GMM AM08** are:

- Modular plastic Container **DIN 50022 Modulbox**, model **M4 HC53**
- Size: front **90** x **71** mm, height **58** mm
- Mounting on **Omega** rail DIN 46277-1 and DIN 46277-3
- **GMM AM08** already installed on the 28 pin socket
- **8 Optocoupled Inputs** that can be both **NPN** or **PNP**
- Status of **8** inputs shown by **8 LEDs**
- Two inputs can pefrom **Interrupt** functions
- Two inputs can perform **Counter** functions
- **4 Relay** Outputs **5 A**
- Status of 4 outputs shown by **4 LEDs**
- **Serial Line** in RS 232, RS 422, RS 485, current loop or TTL
- 1 analog signal for **A/D** conversion with selectable full range
- All signals can be connected through connectors featuring **Normalized** pin out
- **4 I/O TTL** signals
- **I^2C BUS** availabe on connector for external devices
- **Switching** power supply on board; protection of on board logic, through **TransZorb**
- Power supply in **DC** or in **AC**: 10 ÷ 40 Vdc or 8÷24 Vac for logic supply
- Possibility to manage internal FLASH and EEPROM in **In System Programming** mode
- Free software for PC, downloadable from PHILIPS web site, to support **ISP** programming upload the generated code into on-board FLASH memory
- Wide range of development software available: C compilers (**ICC AVR, DDS Micro C**); BASIC compilers (**BASCOM AVR**); etc.
- Several demo programs and use examples provided as source code completely commented available for every development structure

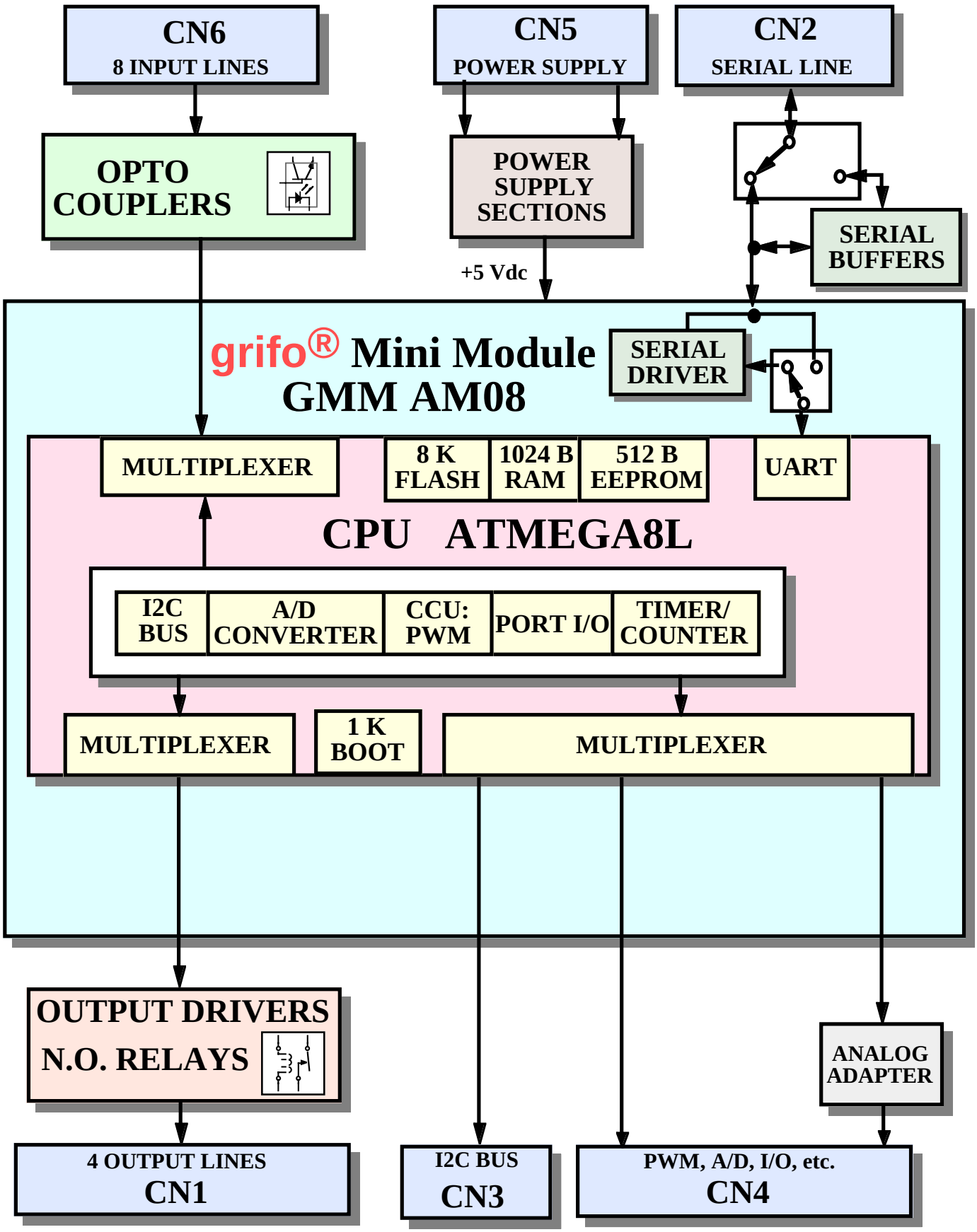

FIGURE 2: BLOCKS DIAGRAM

ANALOG INPUT

One analog input is available on pin 8 of connector CN4 (input signal ADC7).
If the analog input is used, jumper J11 must be not connected and internal reference voltage generator must be selected.
For further information please refer to manual **GMB HR84**.

OPTOCOUPLED DIGITAL INPUT LINES

The card features 8 NPN/PNP inputs connected to two quick release screw terminal connectors and visualized by specific LEDs.
Optocoupled inputs are supplied by a specific external voltage called +Vopto that the user must provide.
For further information please refer to manual **GMB HR84**.

DIGITAL RELAYS OUTPUTS

The board is provided with 4 relays outputs 5 A, normally open, whose status is visualized by 4 LEDs. Each line is driven directly by a signal of **GMM AM08**, buffered through a specific driver and connected to a comfortable quick release screw terminal connector to easy interface to the field signals.
For further information please refer to manuals **GMB HR84** and **GMM AM08**.

I/O TTL SIGNALS

GMB HR84 features up to 4 digital I/O TTL signals of **GMM AM08** connected to a specific connector (CN4).
For further information please refer to manuals **GMB HR84** and **GMM AM08**.

FIGURE 3: SNAPSHOT OF GMB HR84 AND MINI MODULE GMM AM08

I²C BUS LINES

GMB HR84 is provided with one connector (CN3) dedicated to I²C BUS, a hardware peripheral of the microcontroller, connected to two signals of **GMM AM08** (PC.4 and PC.5), each provided with a 4.7 kΩ pull-up on board of **GMB HR84**.
This kind of interface allows to connect devices featuring the same communication standard, to easily improve the system performances.
A wide set of software examples explains the management of most common I²C BUS peripherals like A/D and D/A converters, display drivers, memories, temperature sensors, etc.
For this purpose it can be intresting to condifer **K51-AVR**, for which both technical manual and electric diagram are available, also a wide set of examples in several languager are avalable.
For further information please refer to manuals **GMB HR84** and **GMM AM08**.

POWER SUPPLY SECTION

GMB HR84 is provided with an efficent switching power supply section, that provides supply +5 Vdc voltage needed by logic and output circuits, in any condition of input load and voltage.
If this section is not present, supply voltages must be provided from an external source.
The board features components and circuits designed to reduce consumptions (including the possibility of power-down and idle working modes of Mini Modules) and to reduce noise sensibility.
Remarkable is protection circuit based on TransZorb™ that avoids damages due to incorrect voltages.
To supply optocouplers of galvanically isolated sections an extezrnal voltage is needed.
For further information please refer to chapter “ELECTRIC FEATURES” and paragraph “SUPPLY VOLTAGES”.

SERIAL COMMUNICATION

GMB HR84 features one AMP MODU II 2x4 P/N 280365 dedicated connector (CN6) for serial communication.
By hardware it is possible to select the electric protocol, through a comfortable set of jumpers and drivers to install.
In detail line can be buffered in **current loop, RS 232, RS 422 or RS 485**; in these last two cases also abilitation and direction of line can be defined using signal PB.1, provided that jumper J10 is connected in position 2-3.
For further information please refer to manuals **GMB HR84** and **GMM AM08**.

TECHNICAL FEATURES

GENERAL FEATURES

On board resources:	8 optocoupled digital inputs NPN and PNP 2 optocoupled digital inputs NPN and PNP are interrupts 2 optocoupled digital inputs NPN and PNP are counters 4 relays digital buffered outputs 5 A 1 serial line (RS 232, TTL, RS422, RS485, Current Loop, etc.) 1 connector for I^2C BUS lines 1 analog input 1 eight bit PWM output Up to 4 digital I/O TTL 1 switching power supply section 14 status LEDs + 2 internal LEDs 1 internal eight pin Dip Switch
Mini Module:	**GMM AM08**
Opto input cut-off frequency:	13 KHz

PHYSICAL FEATURES

Size:	90 x 71 x 58 mm (container DIN 50022) 85 x 66 x 32 mm (without container)
Container:	DIN 50022 modulbox, model M4 HC53
Montaggio:	On Ω rails type DIN 46277-1 and DIN 46277-3
Weight:	166 g
Connectors:	CN1: 6 pins quick release screw terminal connector CN2: 9 pins D type female, vertical, connector CN3: 4 pins strip, male, vertical CN4: 2x4 vie AMP MODU II, male, vertical CN5: 2 pins quick release screw terminal connector CN6: 9 pins quick release screw terminal connector
Temperature range:	from 0 to 50 centigrad degreeses
Relative humidty:	20% up to 90% (without condense)

ELECTRIC FEATURES

Power supply:	10÷40 Vdc or 8÷24 Vac	(control logic)
Power required for logic:	2.3 W	(*)
Output power supply:	+5 Vdc	
Current required by GMB HR84:	310 mA max 16÷75 mA max	(+5 Vdc) (+V opto)
Current on +5 Vdc output:	400 mA - 310 mA - 18 mA = 71 mA	
Relays max voltage:	35 Vdc	
Relays max non inductive current:	5 A	(resistive load)
Optocouplers input voltage:	+V opto = 8 ÷ 30 Vdc	(*)
Power required for optocouplers:	4.4 W	
Analog input range:	0÷2.5; 0÷10 V	
Analog input impedance:	4.7 kΩ	
Pull-up on I^2C BUS dedicated lines:	4.7 kΩ	
Termination network RS 422-485:	Line termination resistor Positive pull up resistor Negative pull down resistor	=120 Ω =3.3 KΩ =3.3 KΩ

(*) The data are referred to 20 C° work temperature (for further information please refer to chapter "POWER SUPPLY VOLTAGE").

INSTALLATION

In this chapter there are the information for a right installation and correct use of the card.
The user can find the location and functions of each connector, LEDs, jumper, etc. and some explanatory diagrams.

CONNECTIONS

Module **GMB HR84 & GMM AM08** has 6 connectors that can be linkeded to other devices or directly to the field, according to system requirements. In this paragraph there are connectors pin out, a short signals description (including the signals direction) and connectors location (see figure 17).

CN5 - POWER SUPPLY CONNECTOR

CN5 is a 2 ways, quick release screw terminal connector, vertical, 5.00 mm pitch.
CN5 allows to provide power needed by the switching power supply to generate logic control and optocouplers supply voltage.

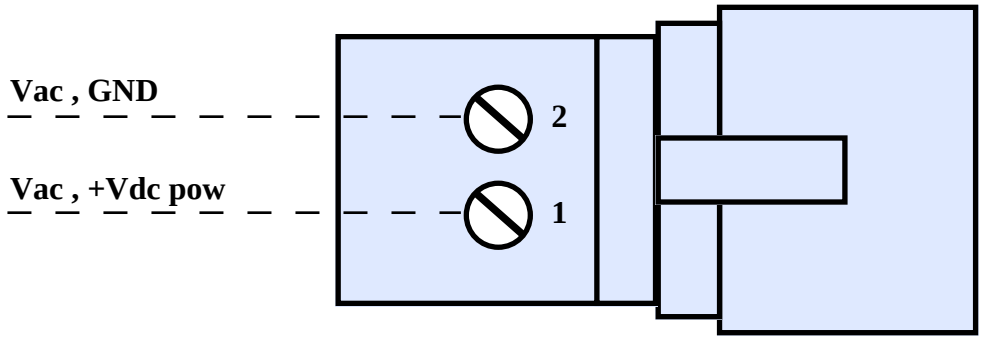

FIGURE 4: CN5 - POWER SUPPLY CONNECTOR

Signals description:

Vac , +Vdc pow = I - Positive terminal of direct supply voltage.
Vac , GND = I - Negative terminal of direct supply voltage.

For further information please refer to paragraphs "POWER SUPPLY" and "ELECTRIC FEATURES".

CN3 - I²C BUS LINE CONNECTOR

CN3 is a 4 ways, male, vertical, strip connector with 2.54 mm pitch.
On CN3 is available a standard interface for any I²C BUS peripheral device.
The connector features +5 Vdc supply voltage generated by on board switching power supply that can be connected to external devices or systems.
Signals are TTL compliant, according to I²C BUS standard, their disposition has been designed to reduce interferences and so easy the connection.

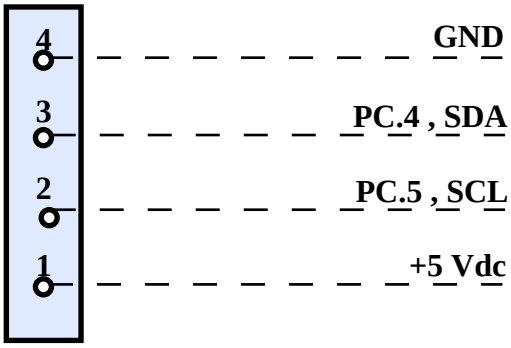

FIGURE 5: CN3 - I²C BUS LINE CONNECTOR

Signals description:

PC.4, SDA	= I/O	- Data signal of I²C BUS software serial line connected to PC.4.
PC.5, SCL	= O	- Clock signal of I²C BUS software serial line connected to PC.5.
+5 Vdc	= O	- Unique +5 Vdc power supply.
GND	=	- Ground.

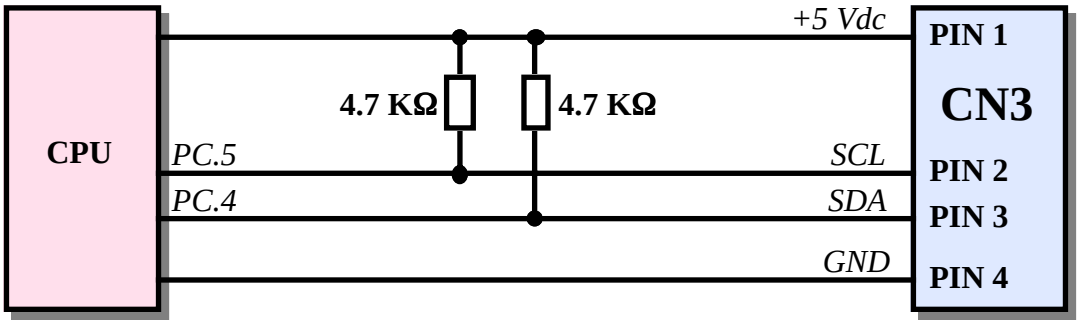

FIGURE 6: I²C BUS CONNECTION DIAGRAM

CN2 - SERIAL LINE CONNECTOR

CN2 is a 9 ways, female, vertical, D-type type connector.
This connector features signals for serial communication in RS 232, RS 422, RS 485, current loop and TTL, performed through hardware module on ZC1 hardware serial port.
Signals position, reported as follows, has been designed to reduce interferences and easy connections to the field, while signals are compliant to CCITT standard of protocol used.
For further information please refer to the manuals of **GMB HR84** and **GMM AM08**.

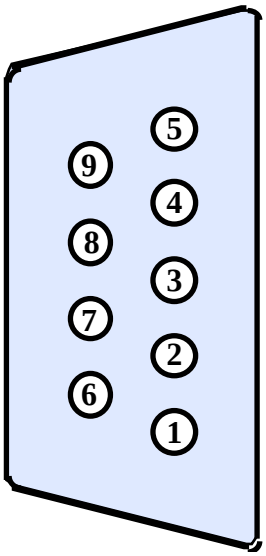

FIGURE 7: CN2 - SERIAL LINE CONNECTOR

Pin	*Signal*	*Direction*	*Description*
RS 232 serial line (please see paragraph "SERIAL COMMUNICATION SELECTION"):			
2	**RX RS232**	= I -	Receive Data for RS 232.
3	**TX RS232**	= O -	Transmit Data for RS 232.
5	**GND**	= -	Ground signal.
RS 422 serial line (please see paragraph "SERIAL COMMUNICATION SELECTION"):			
1	**RX- RS422**	= I -	Receive Data Negative for RS 422.
2	**RX+ RS422**	= I -	Receive Data Positive for RS 422.
3	**TX- RS422**	= O -	Transmit Data Negative for RS 422.
4	**TX+ RS422**	= O -	Transmit Data Positive for RS 422.
5	**GND**	= -	Ground signal.
RS 485 serial line (please see paragraph "SERIAL COMMUNICATION SELECTION"):			
1	**RXTX+ RS485**	= I/O-	Receive/Trasmit Data Positive for RS 485.
2	**RXTX- RS485**	= I/O-	Receive/Trasmit Data Negative for RS 485.
5	**GND**	= -	Ground signal.
Current Loop serial line (please see paragraph "SERIAL COMMUNICATION SELECTION"):			
9	**RX- C.L.**	= I -	Receive Data Negative for Current Loop.
8	**RX+ C.L.**	= I -	Receive Data Positive for Current Loop.
7	**TX- C.L.**	= O -	Transmit Data Negative for Current Loop.
6	**TX+ C.L.**	= O -	Transmit Data Positive for Current Loop.
5	**GND**	= -	Ground signal.

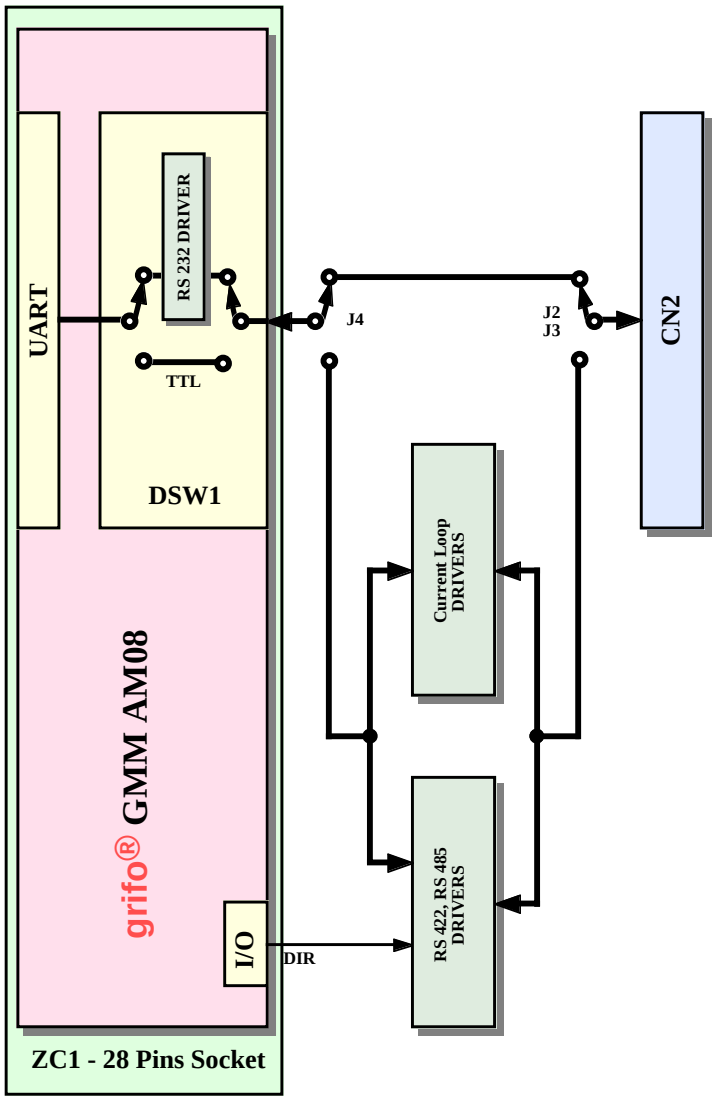

FIGURE 8: SERIAL COMMUNICATION BLOCK DIAGRAM

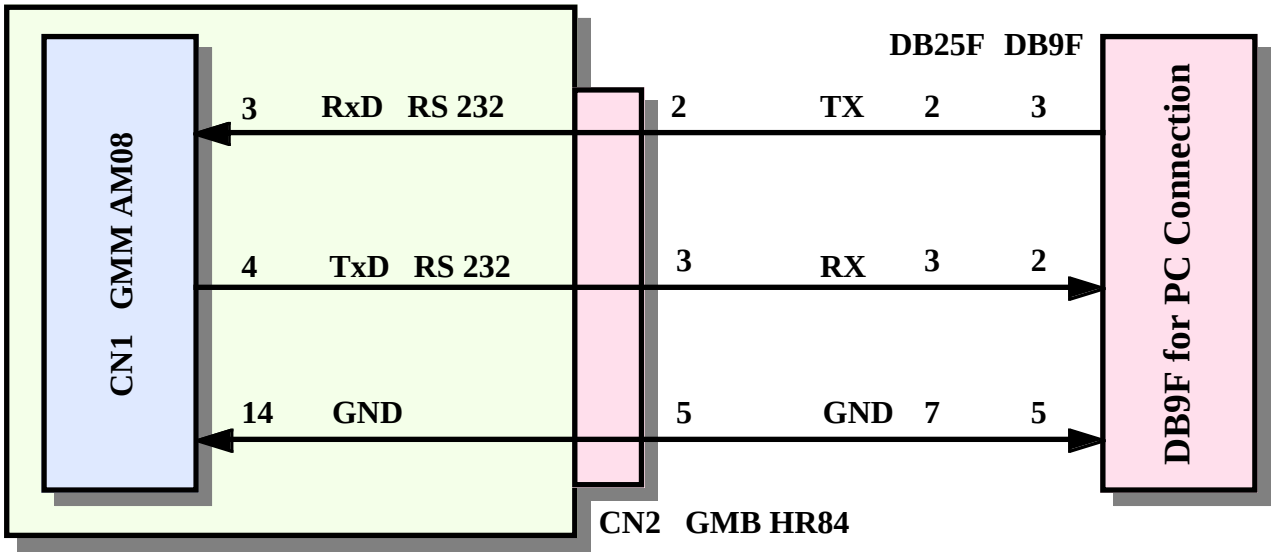

FIGURE 9: RS 232 PC POINT TO POINT CONNECTION EXAMPLE

CN6 - OPTOCOUPLED DIGITAL INPUTS CONNECTOR

CN6 is a 9 ways, quick release, screw terminal connector, pitch 5.0 mm.
CN6 is used to connect the 8 optocoupled NPN or PNP input signals that the card manages and are visualized by green LEDs.
Two of these **inputs** (IN3 and IN4) are connected directly to **interrupt** signals, so they can generate an immediate interrupt request to the CPU.
Two more of these **inputs** (IN5 and IN6) are connected to the exernal trigger of timer/counters, so transictions on these inputs can be **counted by hardware** by CPU.
Please refer to figure 19 for further information.
Connector also features the common pin where to connect one input to close it.
These signals are software managed through **GMM AM08**I/O ports have been carefully selected to take advantage of **grifo®** Mini Modules internal peripherals.
For further information please refer to manual **GMB HR84**.

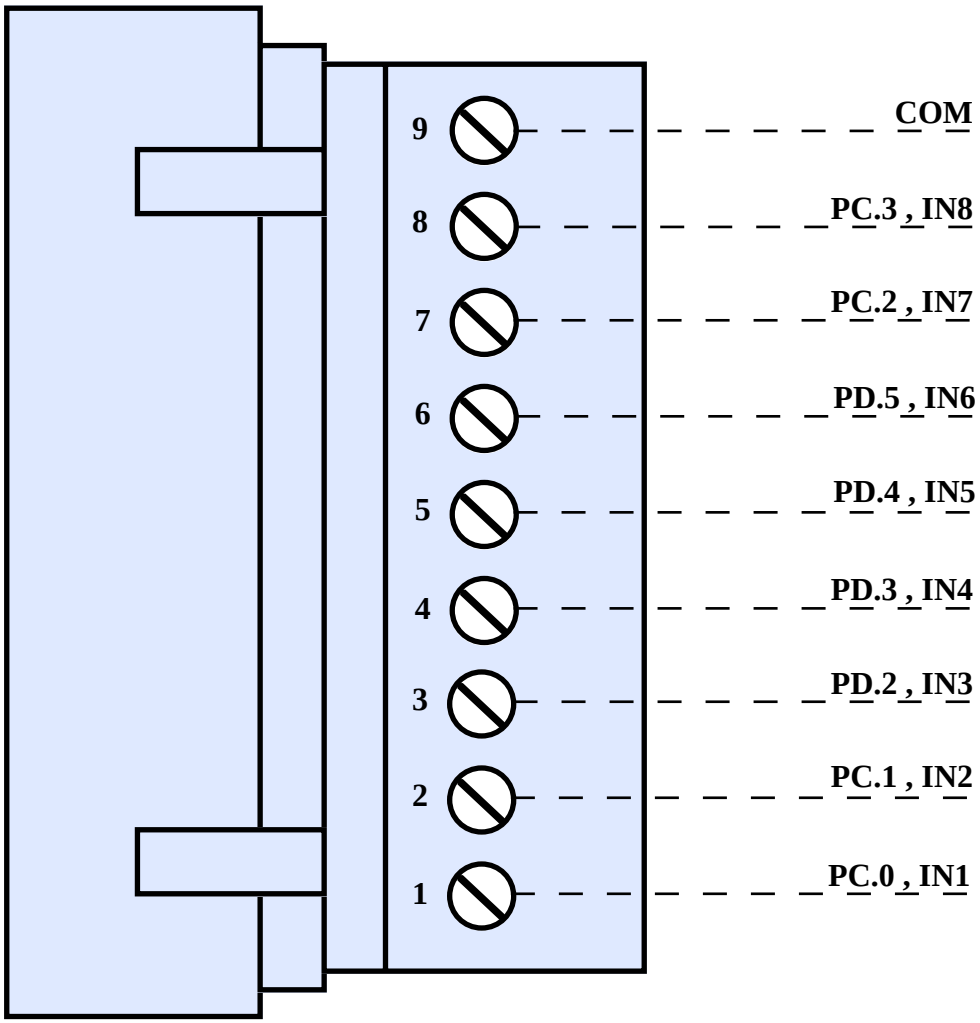

FIGURE 10: CN6 - OPTOCOUPLED DIGITAL INPUTS CONNECTOR

Signals description:

Px.y, INn	=	I - n-th optocoupled input type NPN or PNP, connected to indicated port.
COM	=	- Common pin where an input must be connected to close it.

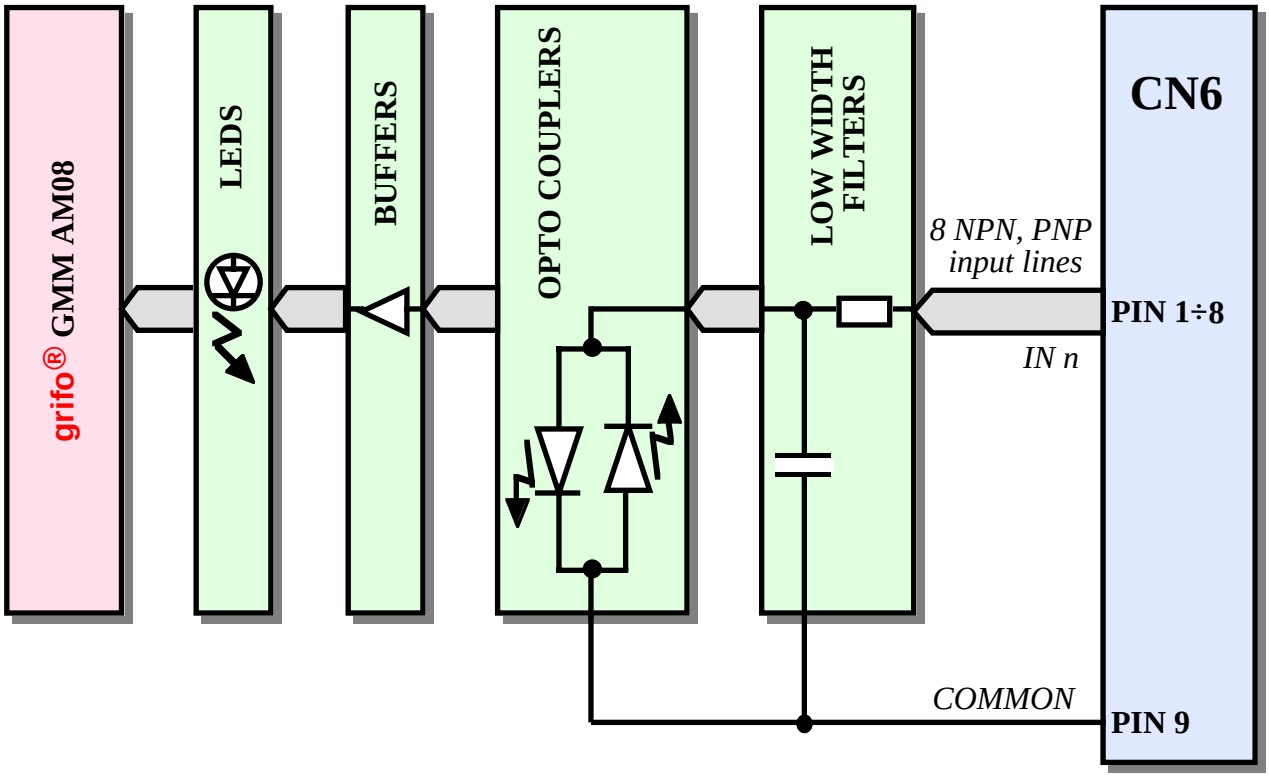

FIGURE 11: OPTOCOUPLED INPUTS BLOCK DIAGRAM

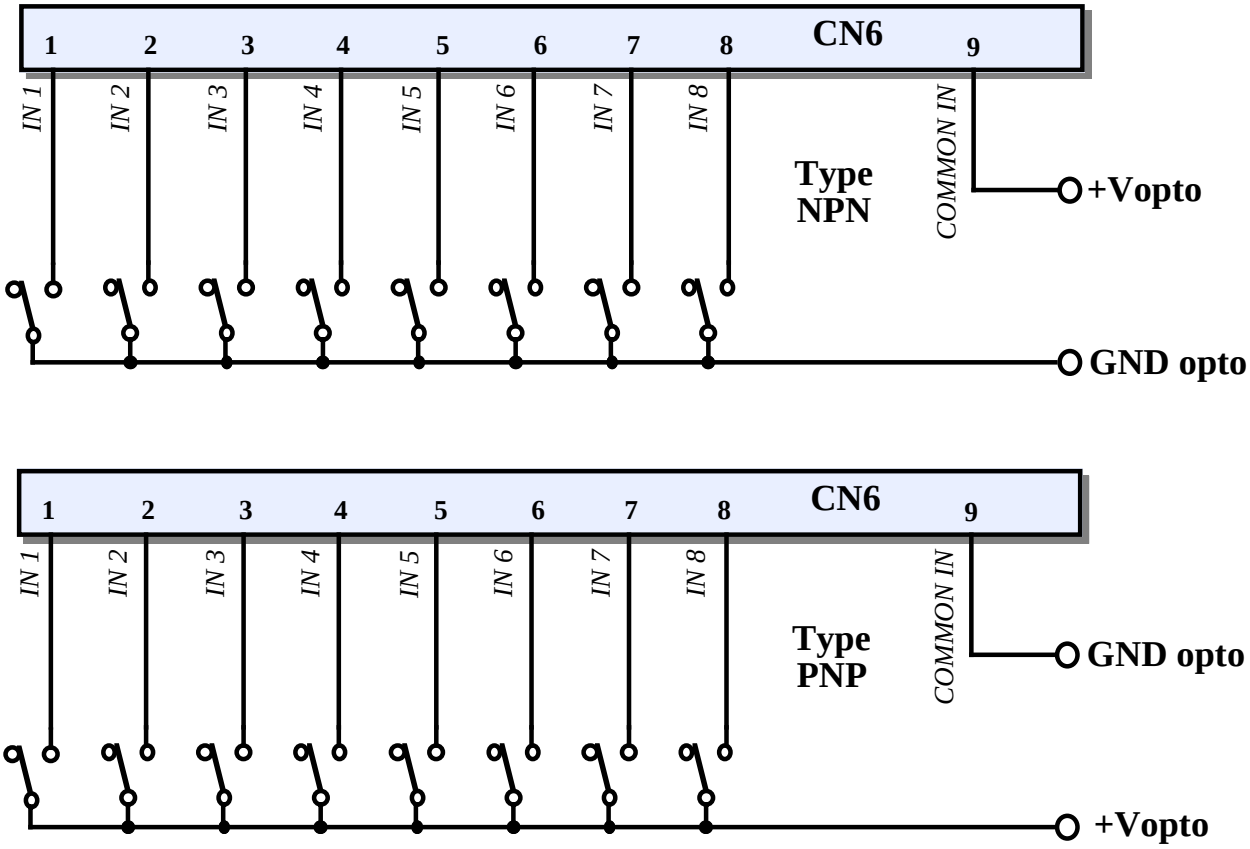

FIGURE 12: OPTOCOUPLED INPUTS CONNECTION DIAGRAM

CN1 - RELAYS OUTPUTS CONNECTOR GROUPS A AND B

CN1 is a 6 ways, quick release screw terminal connector, pitch 5.0 mm.
This connector allows to connect 4 normally open contacts and common pins relays outputs available on **GMB HR84**.
Please remark that maximum (resistive) load for each line is **5 A** and maximum voltage is **30 Vdc**.
These signals are software managed through **GMM AM08** I/O ports, opportunely buffered, and selected carefully to easy management (plese refer to chapter "PERIPHERAL DEVICES SFOTWARE DESCRIPTION").
For further information please refer to manual **GMB HR84**.

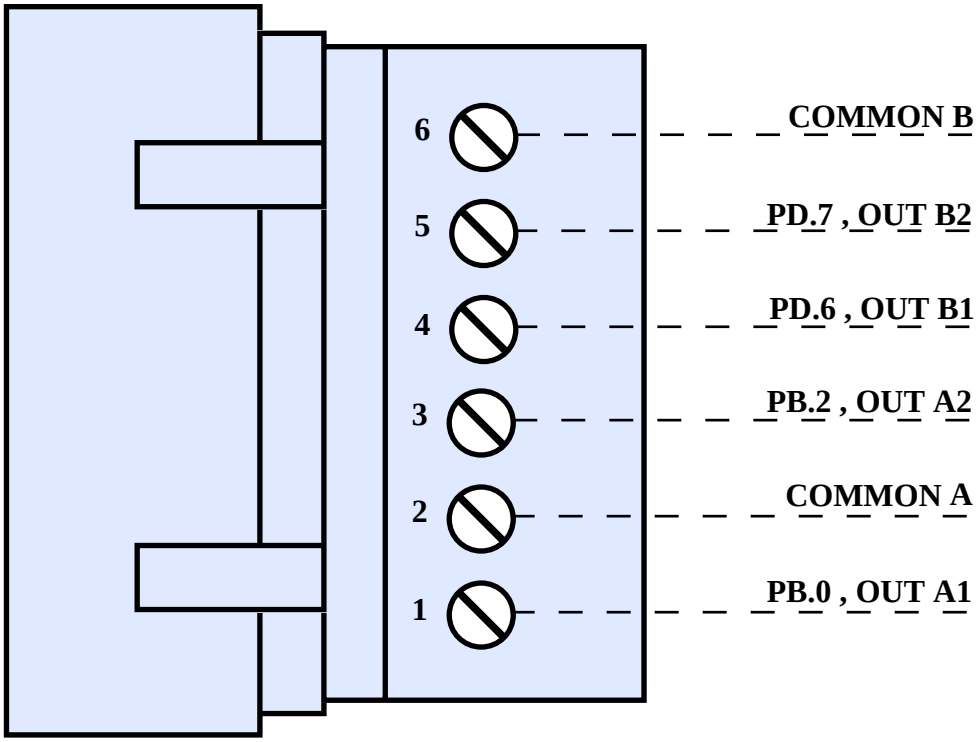

FIGURE 13: CN1 - RELAYS OUTPUTS CONNECTOR GROUPS A AND B

Signals description:

PB.x, OUT An = O - Normally open contact for n-th relay of group A, connected to PB.x.
COMMON A = - Common contact for relays of group A.
PD.x, OUT Bn = O - Normally open contact for n-th relay of group B, connected to PD.x.
COMMON B = - Common contact for relays of group B.

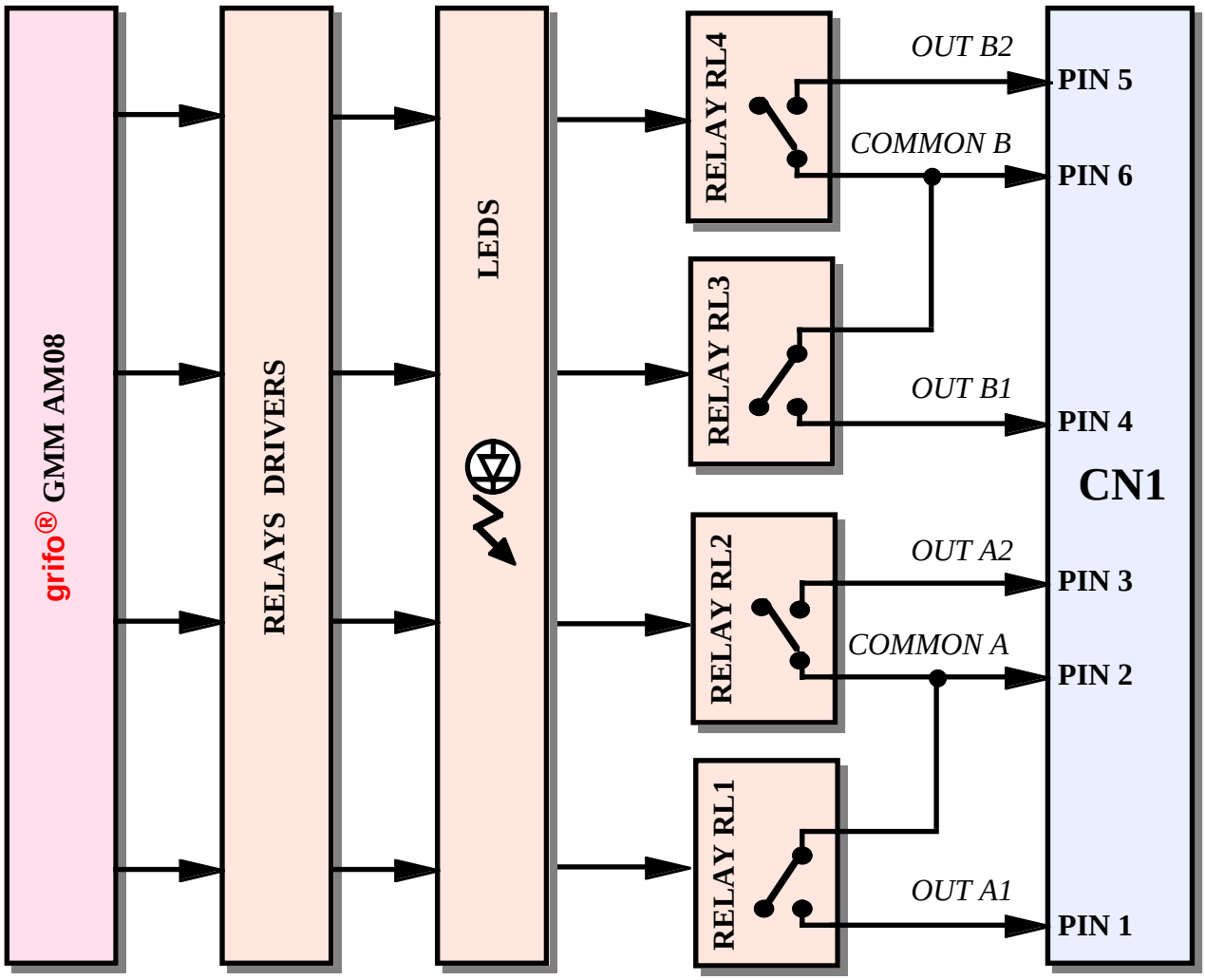

FIGURE 14: RELAY OUTPUTS A AND B BLOCK DIAGRAM

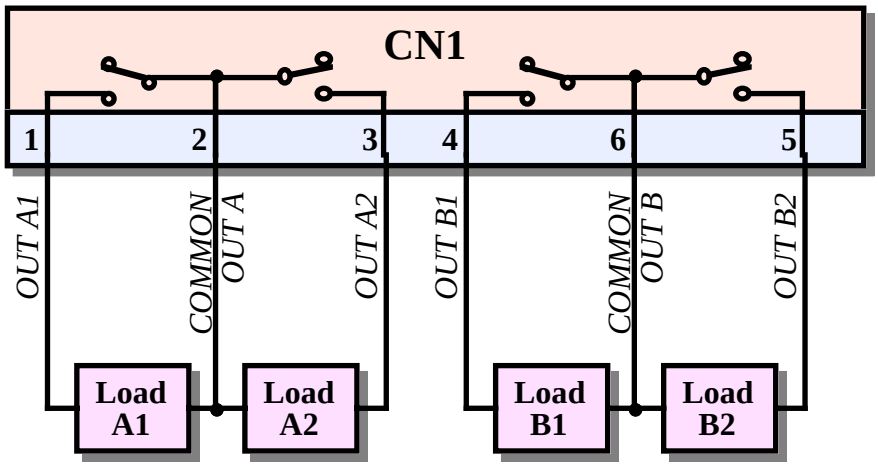

FIGURE 15: RELAY OUTPUTS A AND B CONNECTION DIAGRAM

CN4 - TTL I/O, A/D, ETC. CONNECTOR

CN4 is a 8 ways, male, vertical, AMP MODU II 2x4 connector with pitch 2.54 mm.
This connector features +5 Vdc supply voltage (generated by on board switching power supply), up to 4 TTL digital I/O signals and an analog input connected to A/D section.
Female connector can be ordered from **grifo®** (cod. **CKS.AMP8**) or its parts can be purchased from AMP catalog (P/N 280365: connector and P/N 182206-2: pins to crimp).
It is also possible to order the female connector with pins to crimp already mounted and one meter long cables (**grifo®** cod. **AMP8.cable**).
For further information please refer to the manual of **GMB HR84**.

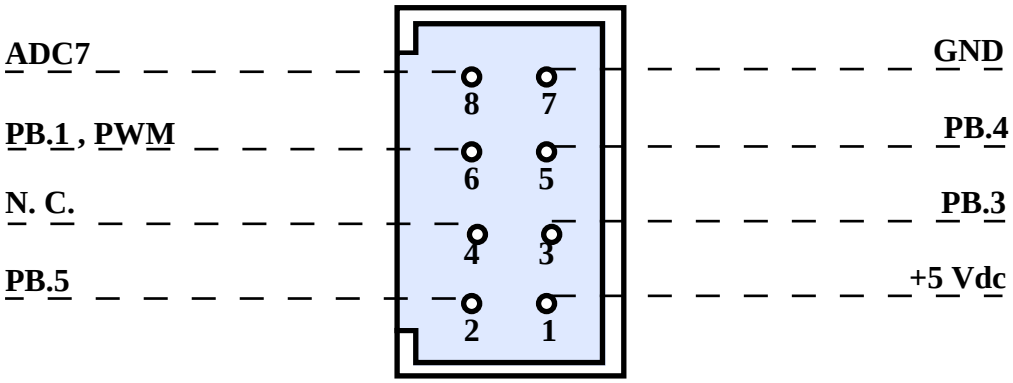

FIGURE 16: CN4 - TTL I/O, A/D, ETC. CONNECTOR

Signals description:

PB.y	= I/O	- TTL digital I/O signal, connected to pin x of socket ZC1
ADC7	= I	- Analog input for A/D converter section (please see manual **GMB HR84**)
PWM	= O	- Pulse Width Modulation TTL output of Mini Module
+5 Vdc	= O	- Positive terminal of +5 Vdc power supply.
GND	=	- Ground signal.
N. C.	=	- No connection.

INTERRUPTS

Possible interrupt sources are:

- Input IN3 of CN1 -> Generates an external interrupt called INT0.
- Input IN4 of CN1 -> Generates an external interrupt called INT1.
- CPU internal peripherals -> Generate internal interrupts. In detail interrupt sources can be: Timer 0, Timer 1, Timer 2, I^2C BUS, UART, A/D converter, analog comparator, SPI, EEPROM, SPM Ready, Brown Out, Watch Dog.

Please refer to **GMM AM08** manual for further information.

I/O CONNECTION

To prevent possible connecting problems between **GMB HR84 & GMM AM08** and the external systems, the user has to read carefully the previous paragraph information and he must follow these instrunctions:

- For RS 232, RS 422, RS 485, Current Loop and I^2C BUSsignals the user must follow the standard rules of each one of these protocols;

- For all TTL signals the user must follow the rules of this electric standard. The connected digital signal must be always referred to card digital ground and if an electric insulation is necessary, then an opto coupled interface must be connected. For TTL signals, the 0V level corresponds to logic state 0, while 5V level corrisponds to logic state 1.

- The analog inputs (A/D Converter section) must be connected to signals in the ranges available, at maximum: 0÷10 Vdc according to card configuration. In any case, jumper J11 must be not connected and internal Vref source must be used. Inputs feature high impedance, anyway an eventual interfacing circuitery should provide low impedance to assure greater stability and precision. Please remark that the analog input on CN4 is provided with filtering capacitors that warrant more stability on the signal to acquire and lower the cut-off frequency.

- For optocoupled input signals, both the contact to acquire and external +Vopto must be connected in serie. In detail, contacts must perform the follwing connection:

	NPN	PNP
IN x	GND opto	+V opto
COMMON	+Vopto	GND opto

to avoid problems with electric noise, it is suggestable to keep galvanically separated +Vopto and board power supply, this means to keep separate board GND and GND opto.

- Relays outputs must be connected directly to the load to drive (remote control switches, power relays, etc.). Board contact is normally open and can bear **5 A** up to **35 Vdc**. To drive load with different supplies, different COMMONS for two groups of relays are available.

POWER SUPPLY

GMB HR84 & GMM AM08 is provided with an efficent circuitery that solves in a comfortable and efficent way the problem to supply the card in any condition of use.
Here follow the volages required by the card:

+V opto: Provides power supply to optocouplers of board input section; input voltage must be in the range 8÷30 Vdc and must be provided on connector CN5.

Vac, +Vdc pow, GND: Provide power supply to control logic and to output section of the board through the on board switching power supply; input voltage must be in the range 10 ÷ 40 Vdc or 8 ÷ 24 Vac and must be provided though puns 1 and 2 of CN5 (in case of Vdc, pin 1 must be connected to positive terminal). This allows to supply the cards using standard devices of industrial sector like transformers, batteries, solar cells, etc. Also, if there is the need to supply at +5 Vdc I^2C BUS external peripherals from **GMB HR84 & GMM AM08**, pins 1 and 4 of CN4 can be used. Please remark that on board switching power supply is provided with single diode rectifier, so in case of Vdc supply, all ground signals (GND) of the card are at the same potential.

To warrant highest immunity against noise and so a correct working of the cards, it is essential that these two voltages are galvanically isolated
In order to obtain this power supply **EXPS-2** can be ordered.
This device performs galvanic isolation starting from mains power supply.
GMB HR84 features a **TransZorb™**-based protection circuit to avoid damages from incorrect tensions and break-down of power supply section.
On board power supply is visualized through a LED on the bottom left corner.
Current available to supply external loads using +5 Vdc **must be less than:**

400 mA - current absorbed by **GMB HR84** - current absorbed by Mini Module

in this case:

400 mA - 310 mA - 18 mA = 71 mA

For further information please refer to paragraph “ELECTRIC FEATURES”.

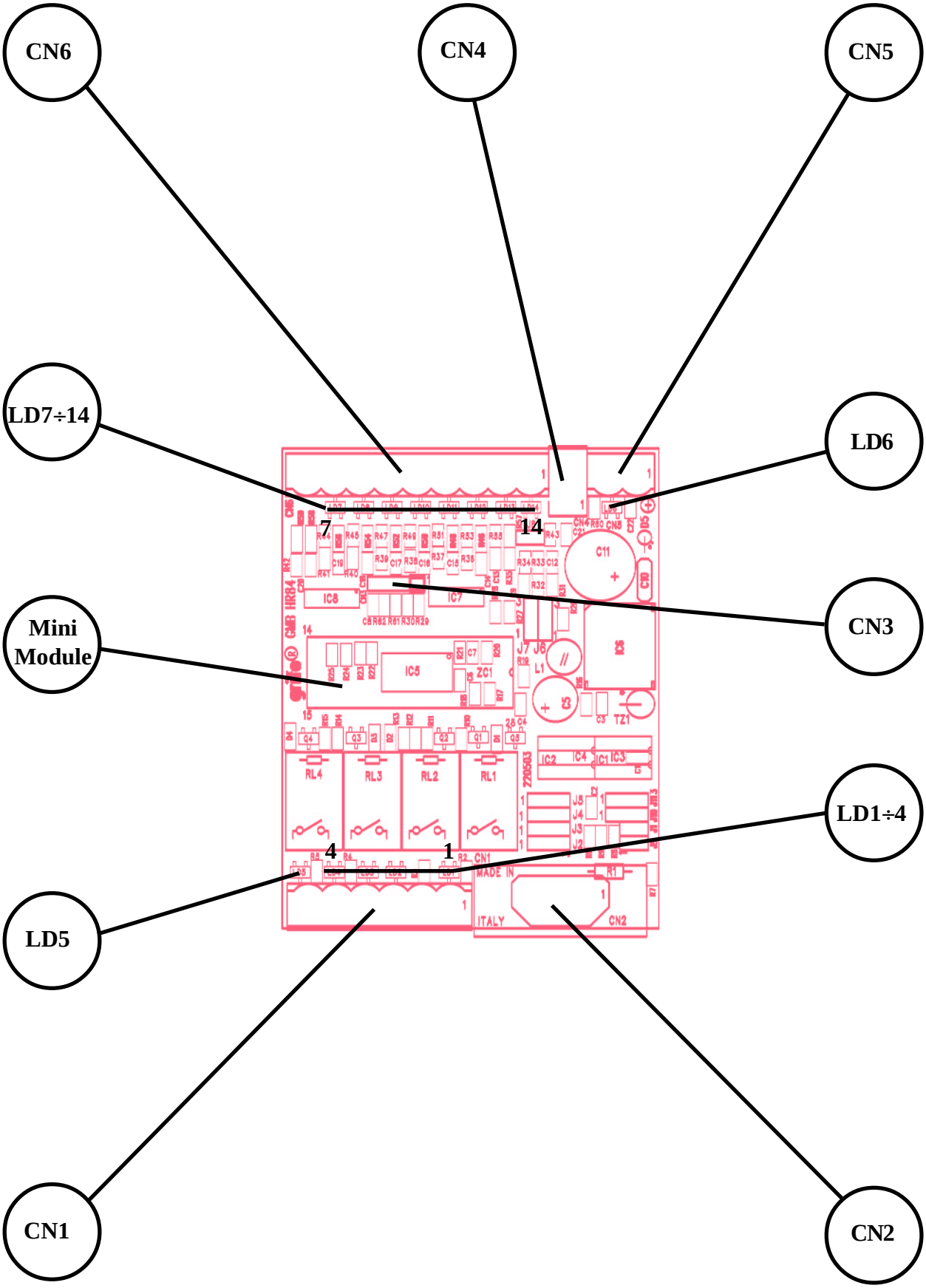

FIGURE 17: LEDS, CONNECTORS, ETC. LOCATION

ANALOG INPUT

GMB HR84 & GMM AM08 features an interface for one analog input that can accept an input voltage in a variable range according to connection of jumper J6.
In any case, jumper J11 must be not connected and internal Vref source must be used.
For further information please refer to manual of **GMB HR84**.

CORRESPONDANCE OF SIGNALS

All hardware resources of **GMB HR84 & GMM AM08** are managed by **GMM AM08** through signals and peripherals of local microcontroller, Philips ATMEGA8L.
To have the complete control of such resources, it is enough to refer to the table in the near page, which indicates the signal and/or peripheral that drives a specific resource.

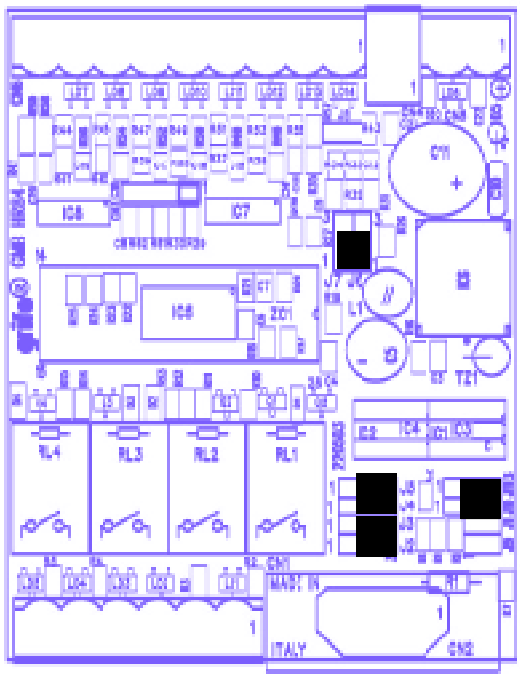

FIGURE 18: JUMPERS CONNECTION

Connector GMB HR84	PIN	Signal GMB HR84	PURPOSE	PIN CN1 GMM AM08	Signal GMM AM08
OPTO INPUTS	1	Input 1	Optocoupled input n° 1.	pin 26	PC.0
	2	Input 2	Optocoupled input n° 2.	pin 25	PC.1
	3	Input 3	Optocoupled input n° 3 or Interrupt 0.	pin 19	PD.2, INT0
	4	Input 4	Optocoupled input n° 4 or Interrupt 1.	pin 18	PD.3, /INT1
	5	Input 5	Optocoupled input n° 5 or counter Timer 0.	pin 17	PD.4, T0
	6	Input 6	Optocoupled input n° 6 or counter Timer 1.	pin 16	PD.5, T1
	7	Input 7	Optocoupled input n° 7.	pin 15	PC.2
	8	Input 8	Optocoupled input n° 8.	pin 13	PC.3
	9	Common pin of optocoupled inputs			
RELAY OUTPUTs	A1	Output 1	Relay output 5 A n° 1.	pin 23	PB.0
	A	Common pin of buffered relay outputs of group A on connector CN3			
	A2	Output 2	Relay output 5 A n° 2.	pin 22	PB.2
	B1	Output 3	Relay output 5 A n° 3.	pin 21	PD.6
	B	Common pin of buffered relay outputs of group B			
	B2	Output 4	Relay output 5 A n° 4.	pin 20	PD.7
AMP 8 I/O	pin 1	+5 Vdc	Power supply +5 Vdc.	pin 28	+5 Vdc
	pin 2	I/O TTL	I/O TTL.	pin 12	PB.5
	pin 3	CAN L	I/O TTL.	pin 8	PB.3
	pin 5	CAN H	I/O TTL.	pin 9	PB.4
	pin 6	D/A	PWM of CCU or I/O TTL.	pin 24	PB.1
	pin 7	GND	Ground of Mini Block.	pin 14	GND
	pin 8	A/D	Input ADC7.	pin 27	ADC7

FIGURE 19: TABLE OF CORRESPONDANCE BETWEEN SIGNALS AND RESOURCES

HOW TO START

One of the most important features is the possibility to program the microprocessor Atmel ATmega8L internal FLASH through a **GMM TST 2**, a specifi tool produced by ATMEL and a RS232 serial connecton.

A) FLASH REPROGRAMMING:

A1) It is very comfortable to use a **GMM TST 2** to program a **GMM AM08**. Please refer to respective manuals for further information. The best device to program **GMM AM08** is programmer Atmel **AVR ISP**, anyway it is also possible to use a free sofware called **Pony Prog**, which uses only the PC port.

A2) Find on CD grifo® and save to a comfortable position on your hard drive the demo program"gmbiob.hex". It can be found starting from main page following the path: English | Examples tables | Mini Modules and Mini Block examples | GMB HR84 (please refer to figure 20).

A3) Perform FLASH programming using **AVR ISP** or Pony Prog and a **GMM TST 2**. As this operation is remarkably different accrding to the tools used, here follows a detailed explanation.

I) Flash Programming by Atmel AVR ISP:

Ia) Control program of **AVR ISP** is **AVR STUDIO**, version 4 or greater. Latest version can be downloaded from Atmel website www.atmel.com. You may download it and install it following the instructions on screen.

Ib) Configure **AVR ISP** to use the 10 ways flat cable and connect it to connector CN7 of **GMM TST 2**, connect **AVR ISP** to PC serial port (please refer to **AVR ISP** instructions), configure **GMM TST 2** to program through AVR ISP and supply it (please refer to **GMM TST 2** manual).

PROGRAMMI PER MINI MODULI E MINI BLOCK

TIPO DI SCHEDA	GET	ASM	Ladder	Abaco® Link BUS	BASIC CBZ80	BASIC BASCOM 8051	BASIC BASCOM AVR	PIC BASIC	BASIC VARI	MCS® Basic 52	C	PASCAL	TIPO DI CPU / BLOCK
VARI	-	-	-	-	-	●	-	-	-	-	-	-	-
CAN GM0	●	-	-	-	-	●	-	-	-	-	●	-	Atmel T89C51cc03 - 8051 Code
CAN GM1	●	-	-	-	-	●	-	-	-	-	●	-	Atmel T89C51cc01 - 8051 Code
CAN GM2	●	-	-	-	-	●	-	-	-	-	●	-	Atmel T89C51cc02 - 8051 Code
GMM 5115	●	-	-	-	-	●	-	-	-	-	●	-	Atmel T89C5115 - 8051 Code
GMM 876	●	-	-	-	-	-	-	●	-	-	-	-	Microchip PIC16F876A - PIC 14 Code
GMM 932	●	-	-	-	-	●	-	-	-	-	-	-	PHILIPS P89LPC932 - 8051 Code
GMM AC2	●	-	-	-	-	●	-	-	-	-	●	-	Atmel T89C51AC2 - 8051 Code
GMM AM08	●	-	-	-	-	-	●	-	-	-	-	-	Atmel ATMega08 - AVR Code
GMM AM32	●	-	-	-	-	-	●	-	-	-	-	-	Atmel ATMega32 - AVR Code
GMB HR84	●	-	-	-	-	●	●	●	-	-	●	-	Mini Block 8 input opto 4 output relè
GMB HR168	●	-	-	-	-	●	-	-	-	-	●	-	Mini Block 16 input opto 8 output relè

FIGURE 20: EXAMPLES TABLES

Ia) Run **AVR STUDIO**. AVR ISP control program can be activated by pressing the button with AVR chip as icon, it is shown in figure 21.

FIGURE 21: ACTIVATION OF AVR STUDIO

Id) Select CPU ATmega8:

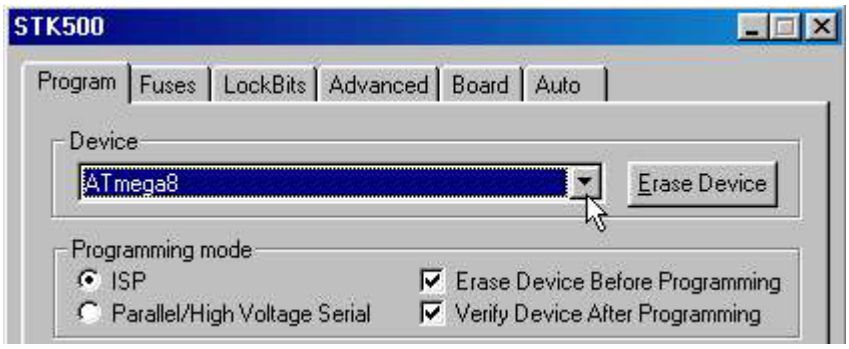

FIGURE 22: SELECT CPU WITH AVR STUDIO

Ie) Configure the CPU not to use JTAG interface and use an high frequency external quartz, as indicated in the images of figure 23.

If) Configure the programmer to perform ID check, erase the device and reprogram with verify FLASH, EEPROM and configuration bits, as indicated in figure 24.

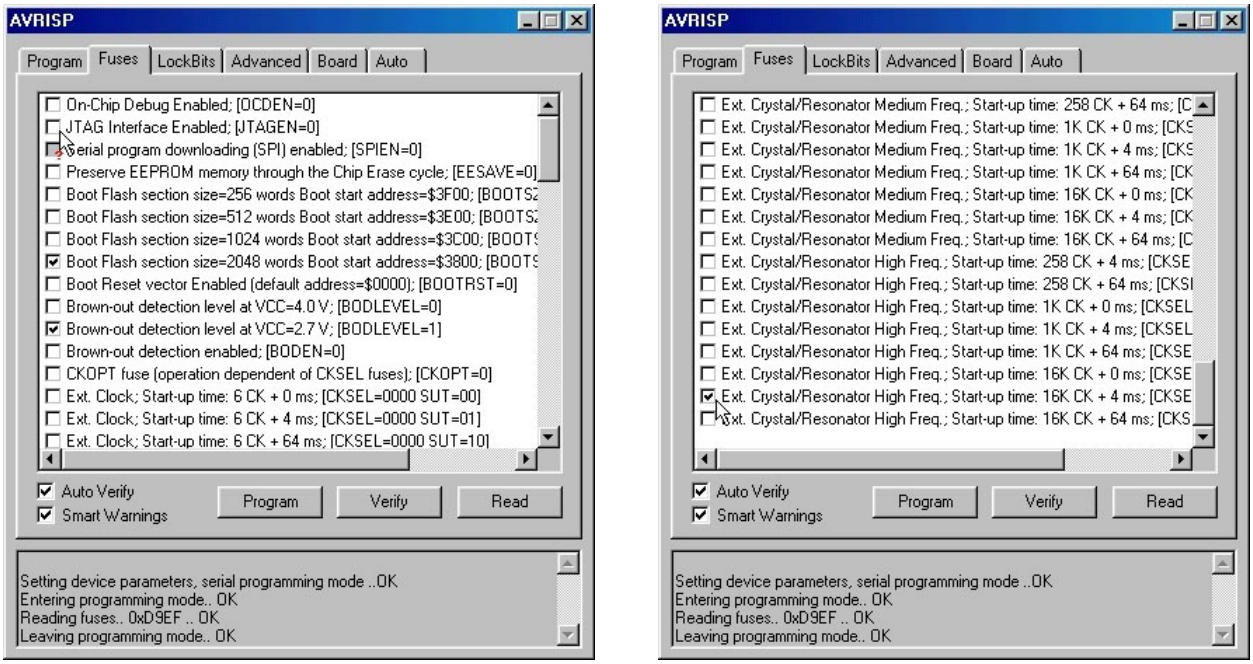

FIGURE 23: CPU CONFIGURATION WITH AVR ISP

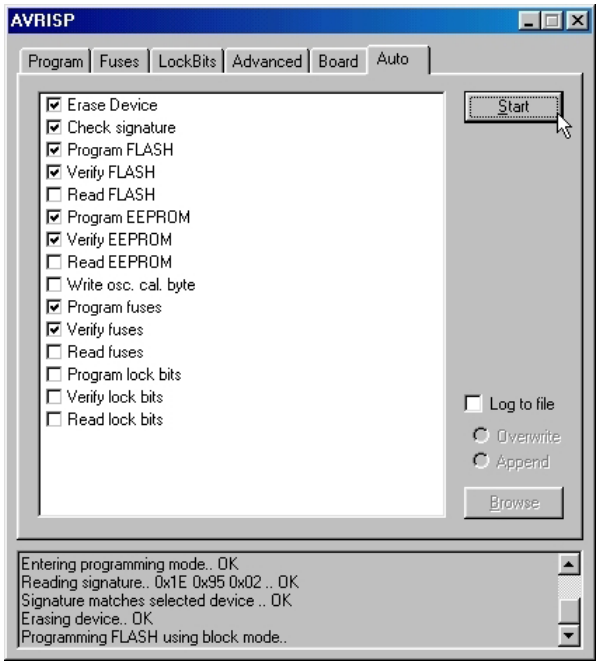

FIGURE 24: CONFIGURATION OF AVR ISP

Ig) Read current EEPROM content. This operation is required to keep internal information used by **grifo®** demo programs to work. If this step is omitted, **grifo®** demo could not work. Save EEPROM content in a file as indicated in figure 25.

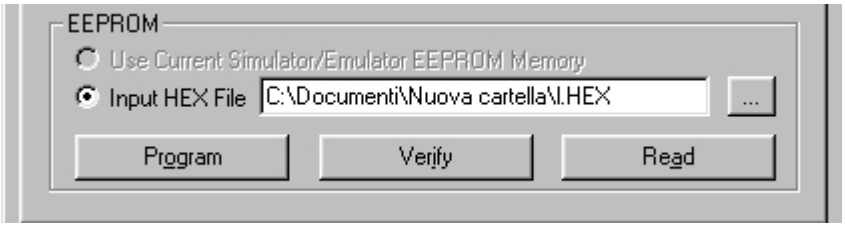

FIGURE 25: EEPROM READ USING AVR ISP

Ih) Load file gmbiob.hex previously saved and perfrom programming by pressing button "Start" in the window indicated in figure 24.

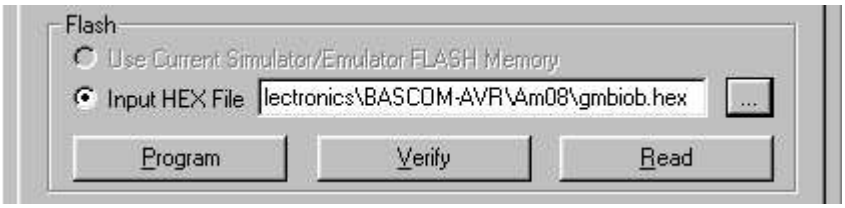

FIGURE 26: FLASH READING AND PROGRAMMING USING AVR ISP

II) *Flash Programming by Pony Prog:*

IIa) Pony Prog is a software that allows to program **GMM AM08** on a **GMM TST 2** simply connecting PC serial port to connector CN6. Version 2.06c supports Atmel ATmega8, you may download it from www.lancos.com and install it following the instructions on screen.

IIb) Connect CN6 of **GMM TST 2** to PC serial port, configure **GMM TST 2** to program through **Pony Prog** and supply it (please refer to **GMM TST 2** manual).

IIc) Run **Pony Prog** and perform calibration through menu Setp | Calibration.

FIGURE 27: CALIBRATION OF PONY PROG

IId) Select communication library SI Prog API through menu Setup | Communication setup.

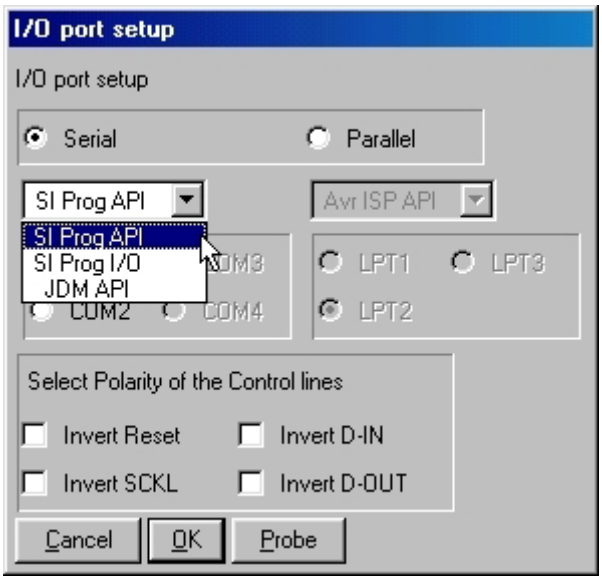

FIGURE 28: COMMUNICATION LIBRARY SELECTION USING PONY PROG

IIe) Select "AVR micro" and "ATmega8" from the specific list boxes.

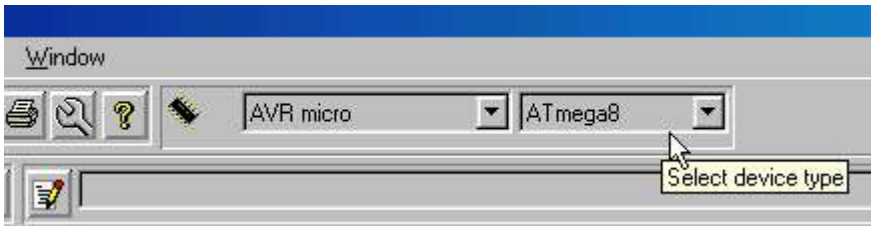

FIGURE 29: COMMUNICATION LIBRARY SELECTION USING PONY PROG

IIf) Open the file "gmbiob.hex" previously saved:

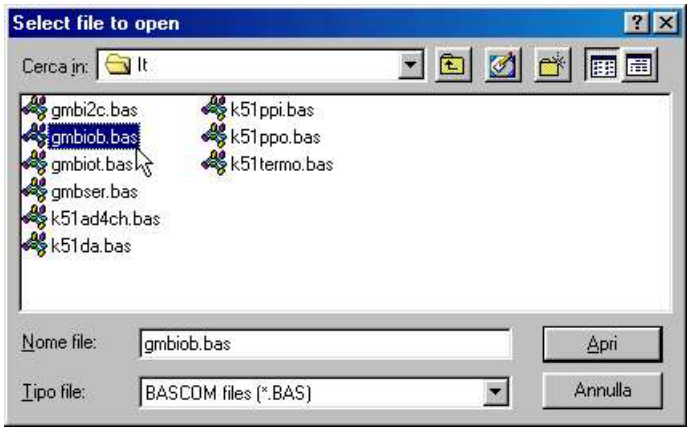

FIGURE 30: FILE LOADING USING PONY PROG

IIg) Configure the CPU not to use JTAG interface and use an high frequency external quartz, as indicated in the following figures.

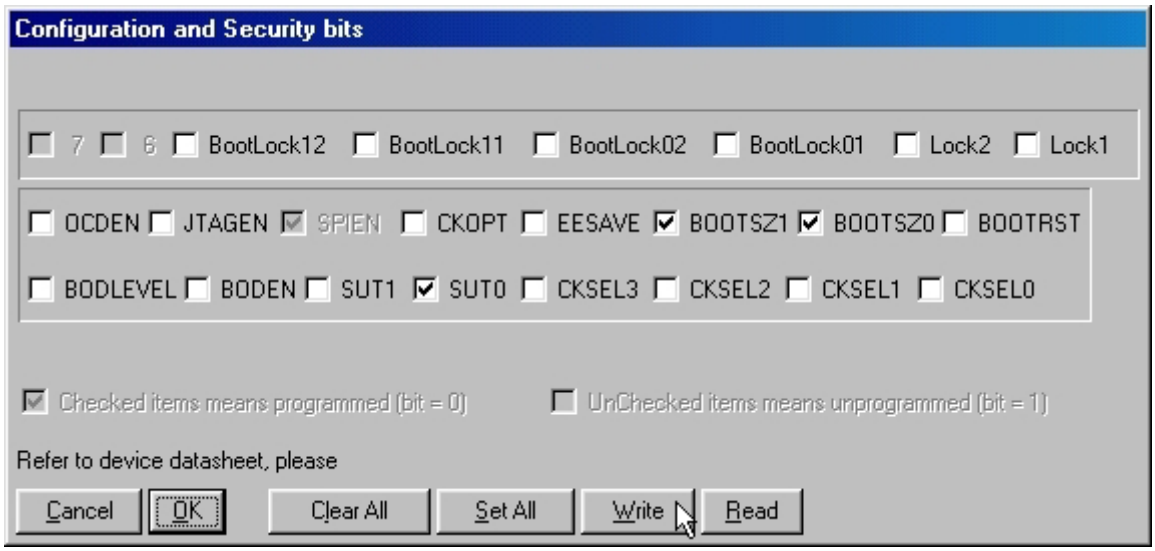

FIGURE 31: CPU CONFIGURATION WITH PONY PROG

IIh) Read current EEPROM content. This operation is required to keep internal information used by **grifo®** demo programs to work. If this step is omitted, **grifo®** demo could not work. Save EEPROM content in a file as indicated in video instructions.

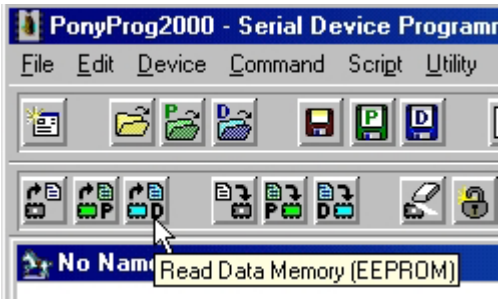

FIGURE 32: EEPROM READ USING PONY PROG

IIi) Configure the programmer to perform ID check, erase the device and reprogram with verify FLASH, EEPROM and configuration bits.

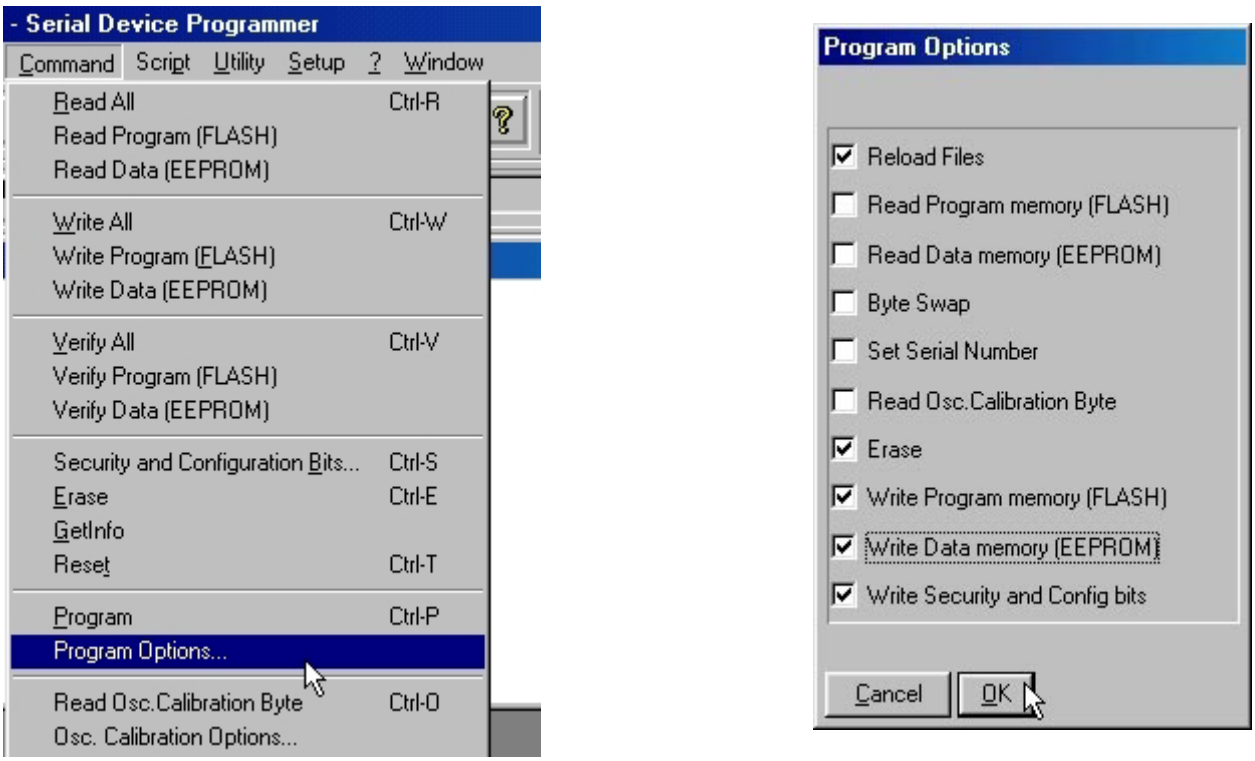

FIGURE 33: CONFIGURATION OF PONY PROG

IIj) Perform the programming pressing the indicated button.

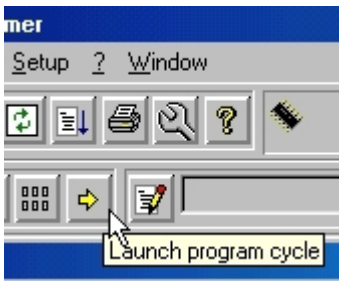

FIGURE 34: PROGRAMMING USING PONY PROG

A4) After performing the programming, remove power supply of **GMM TST 2**.

B) SERIAL CONNECTION TO THE PC:

B1) First of all, open the container of **GMB HR84** to install Mini Module **GMM AM08** on socket ZC1.

. B2) To supply **GMB HR84**, power supply **EXPS-2** can be used. It can provide two galvanically isolated tensions, required for the correct working of **GMB HR84 & GMM AM08**. Also any other power supply capable to generated the two required voltages can be used.

.

FIGURE 35: PICTURE OF POWER SUPPLY EXPS-2

B3) Make the connection described in figure 9.

B4) After performing the connection described at point B3, run a terminal emulatore on the PC, configure it to use the serial port conneted to the Mini Module with 19200 baud, 8 data bit, 1 stop bit, no parity.

B5) Supply the boards. If programming worked fine, the starting screen of demo program appears in the terminal emulator window. If this does not happen, please control the correct making of cable described at point B3 or repeat the programming procedure described at points A.

C) GENERATING DEMO EXECUTABLE CODE:

C1) Install on the hard disk of the development P.C. the software environment selected to develop the application program. There are many different software tools that satisfy any customers requirements but here we remind only the most diffused as the BASCOM AVR, ICC AVR, etc.

C2) On grifo® CD in addition to file with the executable code of the demo program, described at point B2, there are also the source file of the same. These have an extension that identifies the used software development tools (for example gmbiob.bas for BASCOM AVR, gmbiob.c for ICC AVR) and they are properly organized inside demo programs tables available on CD, together with possible definition file (like for example gmbiob.prj for ICC AVR). Once these files have been located they must be copied in a comfortable folder on the hard disk of development P.C.

C3) Compile the source file by using the selected software tools: the file gmbiob.hex must be obtained equal to those available on grifo® CD and already used at steps A2. This operation is very different according to the programming environment selected, so here follows the details:

I) Ricompilation using BASCOM AVR.

Ia) When in BASCOM IDE, load the program source with menu File | Open:

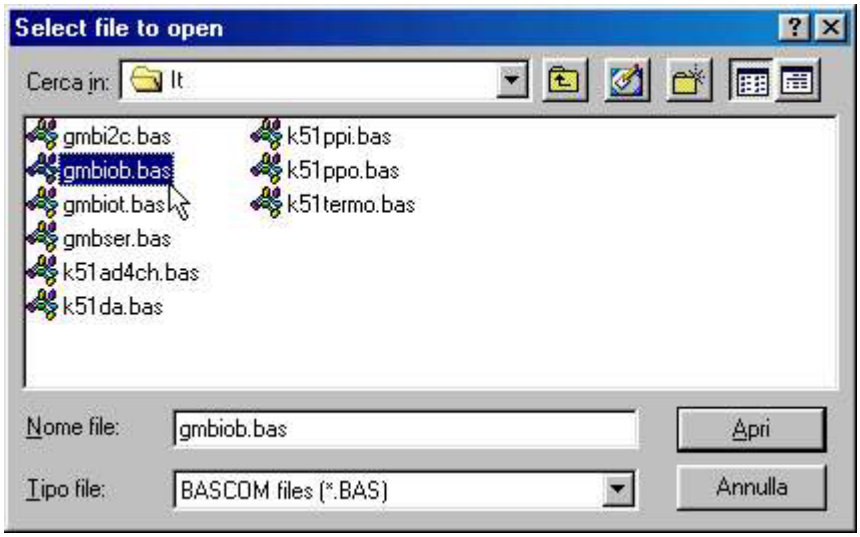

FIGURE 36: LOADING A SOURCE FILE WITH BASCOM AVR

Ib) From menu Options | Compiler | Chip set the value 64 for HW Stack, 32 for Soft Stack, 64 for Framesize, as suggested also in the source code, and press OK. Such values must be considered minimal and must be increased if required:

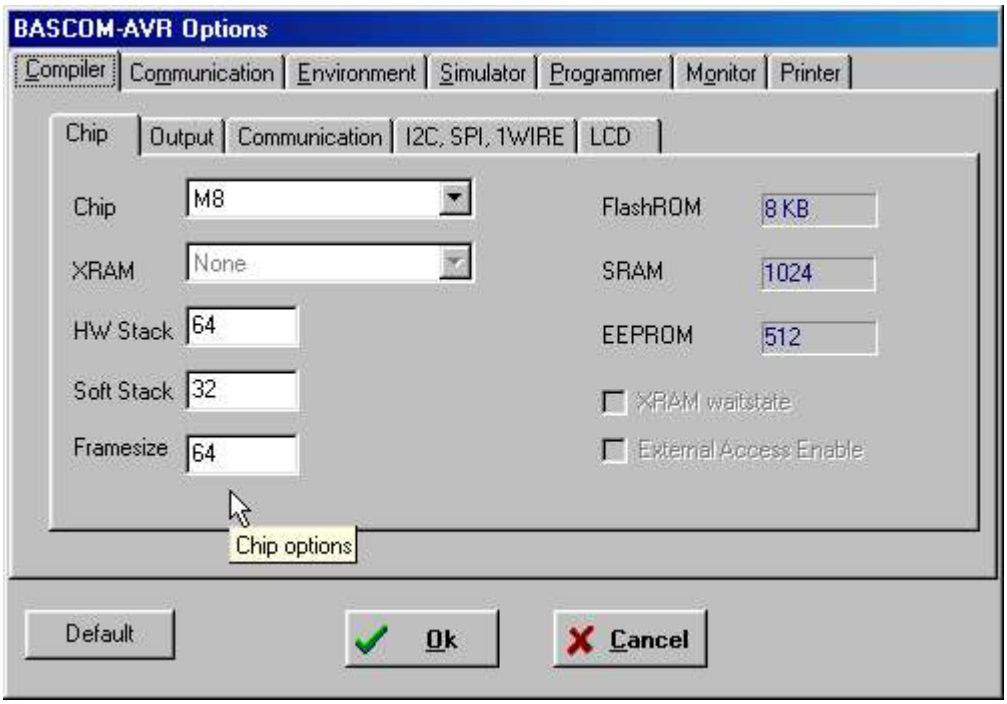

FIGURE 37: CONFIGURATION OF COMPILER BASCOM AVR

Ic) Compile the source file by pressing the button with the icon of an integrated circuit.

FIGURE 38: COMPILATION WITH BASCOM AVR

II) *Ricompilation with ICC AVR.*

IIa) Once in the standard editor, load the project file using the menu Project | Open...:

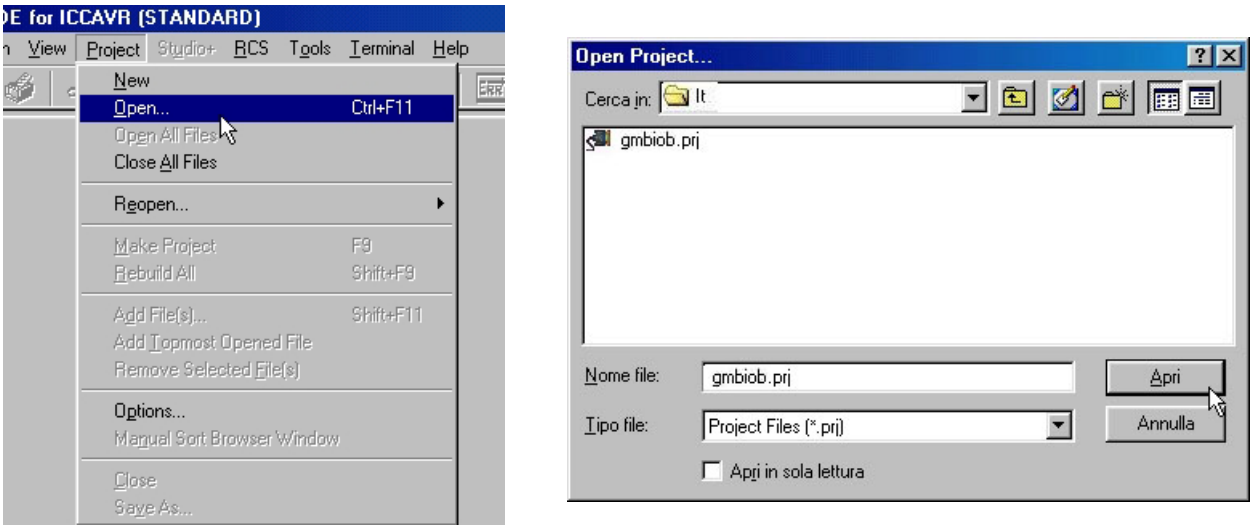

FIGURE 39: LOADING PROJECT FILE WITH ICC AVR

IIb) Compile the project using the menu Project | Make project:

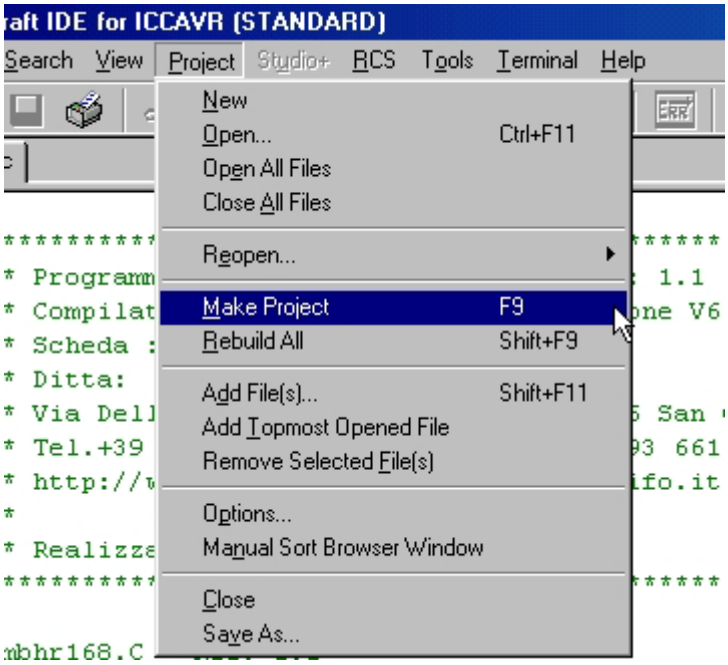

FIGURE 40: COMPILATION WITH ICC AVR

C4) Program the compiled file into FLASH memory of **GMM AM08** repeting the steps after A2.

When during execution of the steps above described a problem or a malfunction is found, we suggest to read and repeat again all the steps carefully and if malfunction persists please contact directly grifo® technician.

Instead when execution of all the steps above described is right, the user has realized his first application program that coincides with demo of **GMM AM08 & GMB HR84**.
At this point it is possible to modify the source of the demo/s program according to application requirements and test the obtained program with the steps above listed (successive to A2, B and C) in cyclic mode, until the developed application program is completely well running.
When this focus is reached the developmnet P.C. can be eliminated, by obtaining a self running card, as below described:

D) *FINAL APPLICATION:*

D1) Install **GMM AM08** into **GMB HR84** and close it.

PERIPHERAL DEVICES SOFTWARE DESCRIPTION

In the previous paragraphs are described the peripheral connections to the field, while in this one there is a specific description of registers meaning and function (please refer to I/O addresses table, for the registers names and addresses values).
For a more detailed description of the devices, please refer to documentation of **GMB HR84** and **GMM AM08**.
In the following paragraphs the **D7÷D0** and **.0÷7** indications denote the eight bits of the combination used in I/O operations.

RELAYS OUTPUTS

Staus of 4 digital relays outputs is set through 4 signals of 28 pin socket ZC1, which means I/O TTL signals of **GMM AM08**.
When the signal of socket ZC1 is set to logic state low (logic 0), the corresponding output is actived (relay contact is connected to its common pin).
Viceversa when the signal is set to logic state high (logic 1) the corresponding output is deactived (relay open).
As previously said, LEDs LD1÷4 provide a visual indication of digital outputs status (LED ON = output actived).
Summarizing, the correspondance is:

PB.0 , OUT A1 -> LED LD1
PB.2 , OUT A2 -> LED LD2
PD.6 , OUT B1 -> LED LD3
PD.7 , OUT B2 -> LED LD4

SERIAL LINE

The **GMM AM08** signals used are the ones called TxD and RxD.

I^2C BUS

Signals used are pin 3 of CN3 (SDA) and pin 2 of CN3 (SCL).
Please remark that **GMM AM08** is provided with an hardware I^2C BUS interface, so this must be used by sofware managin the microprocessor internal registers through the high level instructions of the development language or the functions that can be found in the demo programs.
For further information please refer to the component data sheet.
Connector CN3 of **GMB HR84** provides signals SDA and SCL with 4.7 kΩ pull up resistors.

OPTOCOUPLED INPUTS

Status of 8 digital optocoupled inputs can be acquired by software reading the status of corresponding **GMM AM08**.
When NPN or PNP inputs are enabled, corresponding signals are at logic state low (logic 0), viceversa when inputs are disabled a logic level high is acquired (logic 1).
As previously said, LEDs LD7÷14 give a visual indication of digital inputs status (LED ON means input actived).
Summarizing, the correspondance is:

PC.0 , IN1 ->	LED LD14
PC.1 , IN2 ->	LED LD13
PD.2 , IN3 ->	LED LD12
PD.3 , IN4 ->	LED LD11
PD.4 , IN5 ->	LED LD10
PD.5 , IN6 ->	LED LD9
PC.2 , IN7 ->	LED LD8
PC.3 , IN8 ->	LED LD7

DIGITAL TTL I/O

They are pins 2, 3, 5 and 6 of connector CN4, connected respectively to signals PB.5, PB.3, PB.4 and PB.1 of microcontroller I/O port B.

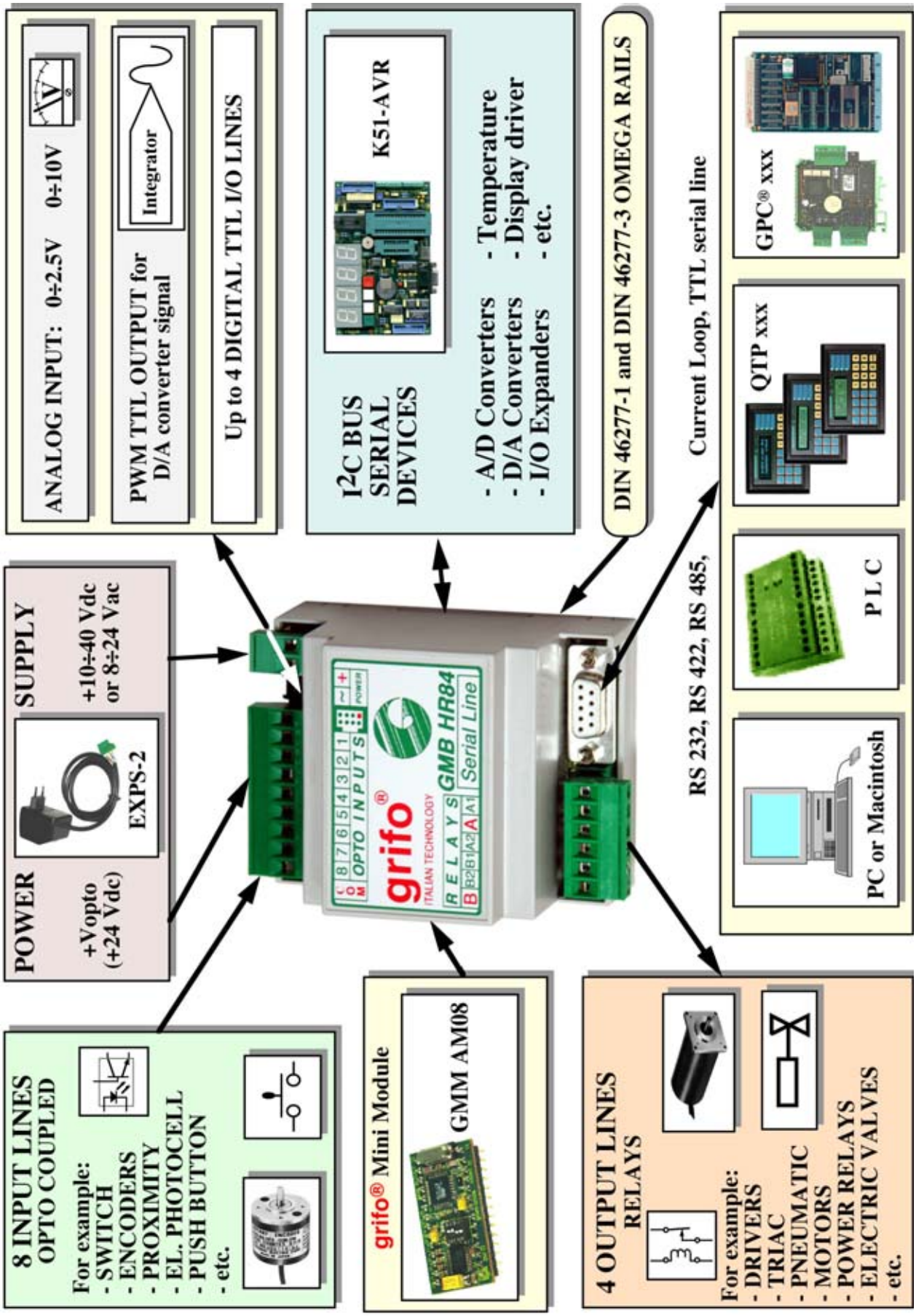

FIGURE 41: CONNECTIONS EXAMPLE

APPENDIX A: ALPHABETICAL INDEX

N

O

P

R

S

T

W